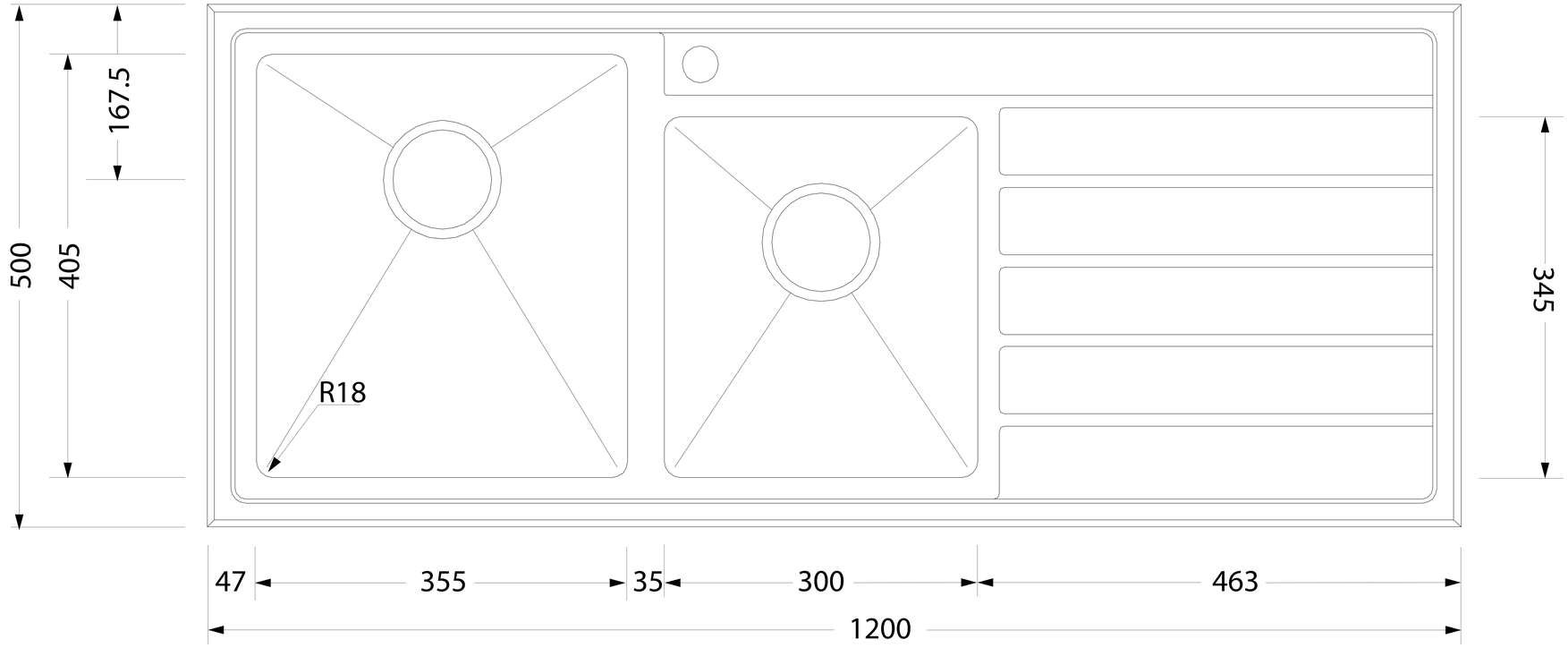

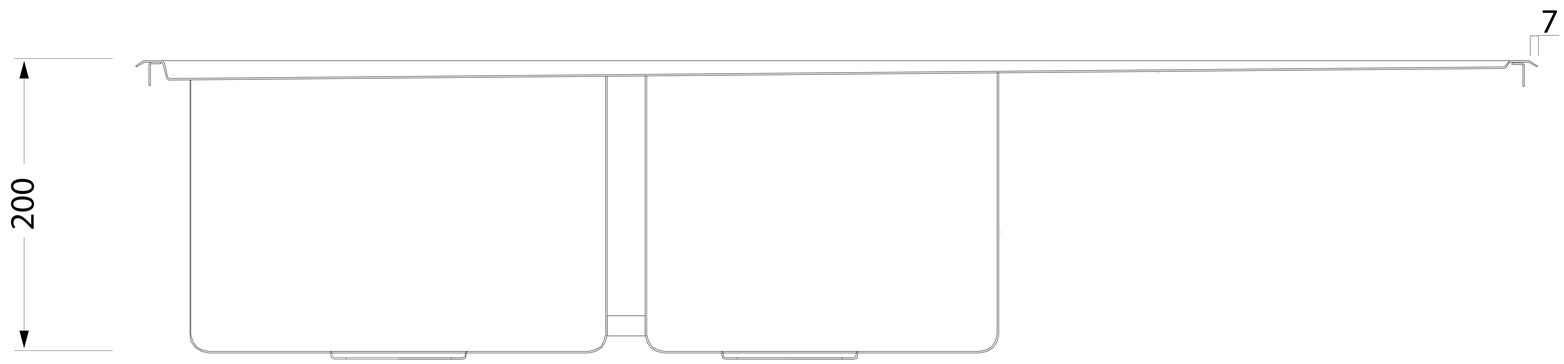

Oliveri
CAD Drawing: AP1411